Section 12.5
Volume of Pyramids and Cones

Volume of a Pyramid

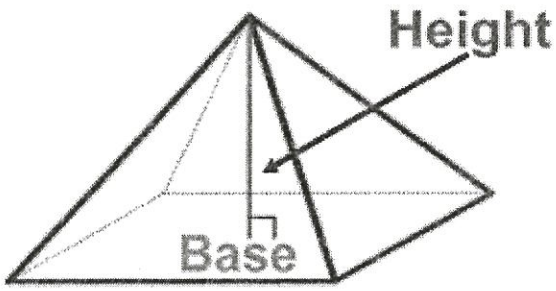

$$\text{VOLUME OF A PYRAMID} = \frac{(\text{Area of Base})(\text{Height})}{3}$$

Examples

Find the volume of the pyramid.

1.

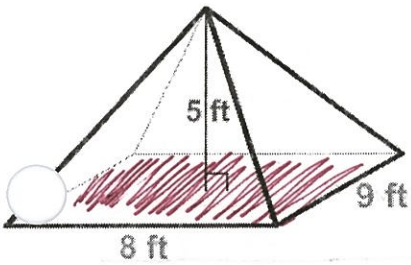

$B = 8(9) = \boxed{72 \text{ ft}^2}$

$H = 5 \text{ ft}$

$\text{Volume} = \frac{72(5)}{3}$

$\boxed{\text{Volume} = 120 \text{ ft}^3}$

2.

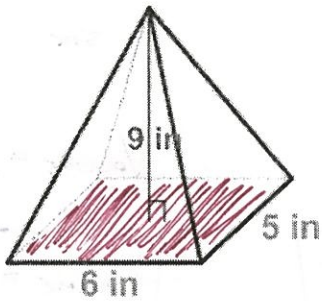

$B = 6(5) = \boxed{30 \text{ in}^2}$

$H = 9 \text{ in}$

$\text{Volume} = \frac{30(9)}{3}$

$\boxed{\text{Volume} = 90 \text{ in}^3}$

3.

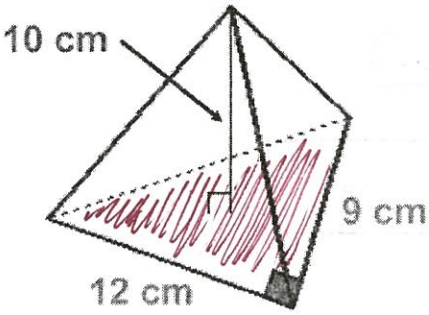

$B = \frac{12(9)}{2} = \boxed{54 \text{ cm}^2}$

$H = 10 \text{ cm}$

$\text{Volume} = \frac{54(10)}{3}$

$\boxed{\text{Volume} = 180 \text{ cm}^3}$

4.

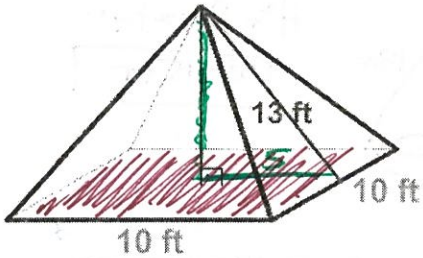

$B = 10(10) = \boxed{100 \text{ ft}^2}$

$H = 12 \text{ ft}$

$\text{Volume} = \frac{100(12)}{3}$

$\boxed{\text{Volume} = 400 \text{ ft}^3}$

5. Given a pyramid with a surface area of 896 ft^2, find the slant height, height, and volume.

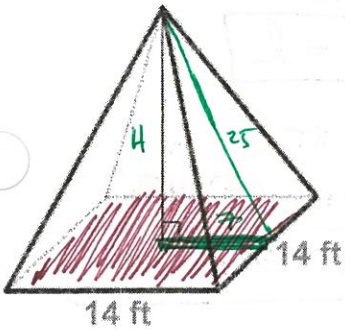

$SA = B + \frac{Pl}{2}$

$896 = (14 \cdot 14) + \frac{(4 \cdot 14)l}{2}$

$896 = 196 + 28l$

$-196 \quad -196$

$\frac{700}{28} = \frac{28l}{28}$

$\boxed{25 \text{ ft} = l}$

$H^2 + 7^2 = 25^2$

$\boxed{H = 24 \text{ ft}}$

$\text{Volume} = \frac{196(24)}{3}$

$\boxed{\text{Volume} = 1568 \text{ ft}^3}$

Volume of a Cone

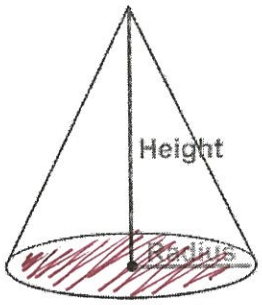

$$\text{Volume of a Cone} = \frac{\pi(\text{radius})^2(\text{height})}{3}$$

Examples

Find the volume of the cone.

6.

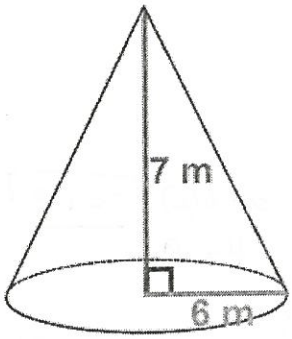

$$\text{Volume} = \frac{\pi(6)^2(7)}{3}$$

$$\boxed{\text{Volume} = 84\pi\ m^3}$$

7.

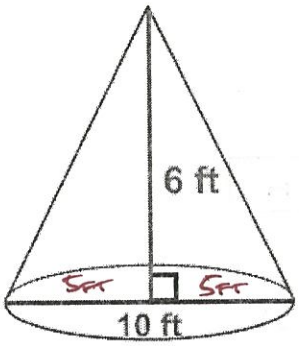

$$\text{Volume} = \frac{\pi(5)^2(6)}{3}$$

$$\boxed{\text{Volume} = 50\pi\ ft^3}$$

8.

$H^2 + 10^2 = 26^2$

$\boxed{H = 24\ m}$

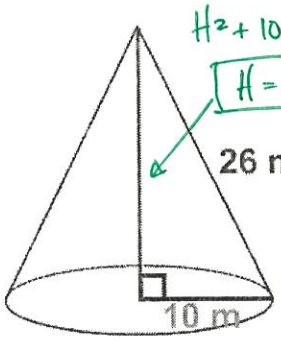

$$\text{Volume} = \frac{\pi(10)^2(24)}{3}$$

$$\boxed{\text{Volume} = 800\pi\ m^3}$$

9. Find the volume of a cone with a slant height of 17 feet and a diameter of 16 feet.

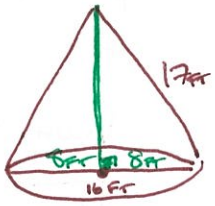

$H^2 + 8^2 = 17^2$

$\boxed{H = 15\ ft}$

$$\text{Volume} = \frac{\pi(8)^2(15)}{3}$$

$$\boxed{\text{Volume} = 320\pi\ ft^3}$$

10. The volume of a cone that is 256π cm^3 has a radius of 8 cm. Find the height, slant height, and the surface area of the cone.

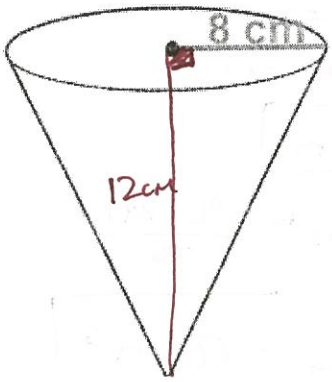

$$V = \frac{\pi r^2 h}{3}$$

$$3 \cdot 256\pi = \frac{\pi(8)^2 h}{3} \cdot 3$$

$$768\pi = 64\pi h$$

$$\frac{768\pi}{64\pi} = \frac{64\pi h}{64\pi}$$

$$\boxed{12\ cm = h}$$

$$8^2 + 12^2 = l^2$$

$$\boxed{\sqrt{208} = 4\sqrt{13} = l}$$

$$S.A. = \pi r^2 + \pi r l$$

$$S.A. = \pi(8)^2 + \pi(8)(4\sqrt{13})$$

$$\boxed{S.A. = 64\pi + 32\pi\sqrt{13}\ cm^2}$$